HO5090 Spacer Kit **For use with ALL SeaStar front mount cylinders.**

HONDA	1998 to DATE	30 & 50 HP	Fig. 4.

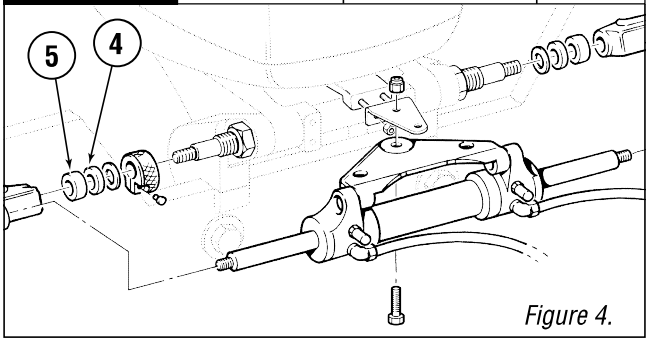

Figure 4.

MERCURY	1998 to DATE	40, 50 & 60 HP 2 & 4 STROKE	Fig. 5.

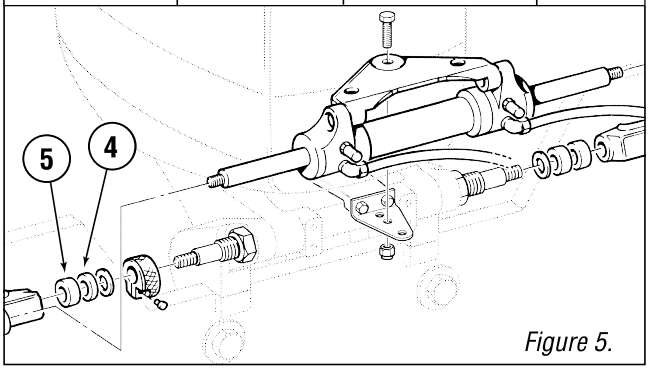

Figure 5.

JOHNSON/EVINRUDE, SUZUKI	1998 to DATE	40–140 HP 4 Stroke	Fig. 6.

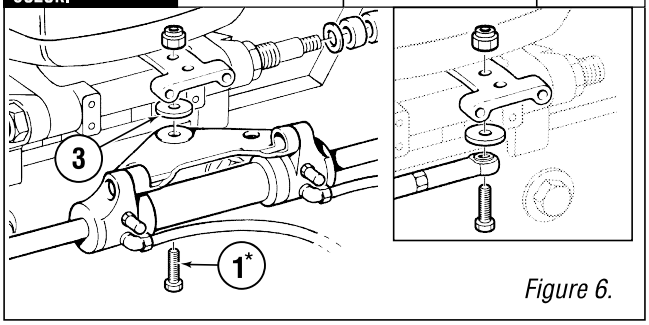

Figure 6.

JOHNSON/EVINRUDE, SUZUKI	1998 to DATE	60 & 70 HP	Fig. 7.

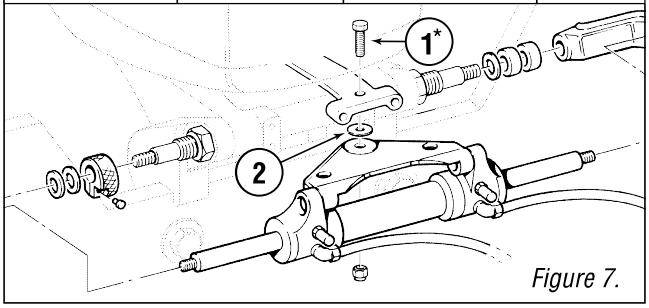

Figure 7.

YAMAHA	1990 to DATE 2002 to DATE	70–90 HP 25–70 HP 4 Stroke	Fig. 8.

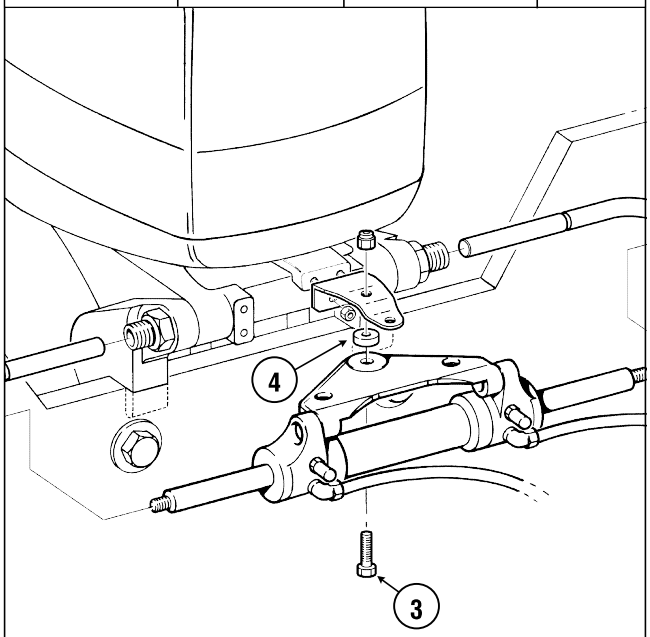

Figure 8.

SUZUKI	1998 to DATE	115-140 HP	Fig. 9.
FORCE	1985 to 1994	90/150 HP	Fig. 9.

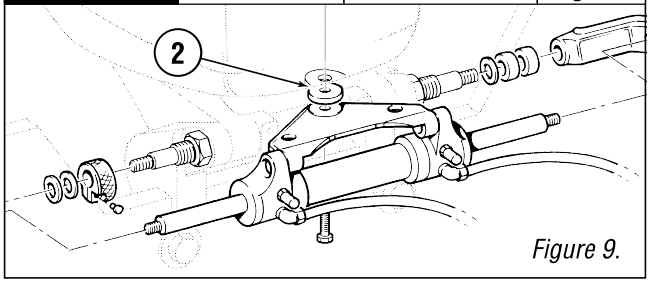

Figure 9.

ITEM	QTY	DESCRIPTION
*1	1	HHCS 3/8" NF x 2-1/4" SS (Tiller Bolt)
2	1	SS Fender Washer
3	1	Aluminum Spacer 1/2"
4	1	3/16" Spacer, Yamaha
5	2	Thick Nylon Spacer 3/8"

PLEASE NOTE: Items are only available in Kit# HO5090, parts are not sold separately.

* *Refer to page 44 for correct torque specifications.*