11. Tighten the support rod nut and piston rod nut.
12. Tighten the two gland cap screws and torque to 60 in-lb.
13. Install the fitting to the end gland. Refer to the instructions in the section for Fitting Kit # HF4203.
14. Repeat steps 1–13 for the opposite side gland.
15. Bleed the hydraulic system per the instructions in the BayStar Steering Installation Manual, Book 22.3 (P/N 998010).

FITTING KIT # HF4203

⚠ WARNING

Failure to properly tighten the lock-nut (item 1) may lead to loss of steering control. Loss of steering control may result in unpredictable boat behavior, collision with an obstacle and/or ejection from vessel, leading to property damage, personal injury and/or death.

1. Remove existing fitting by holding the fitting body with a 5/8" wrench and loosening the lock nut (item 1, figure B) with a 9/16" wrench. The fitting can now be removed by hand.
2. On replacement fitting, back off the lock nut until it stops.

   NOTE: O-ring must be fully on sealing surface and cannot contact any threads. Do not use Teflon tape or any liquid pipe sealant with ORB fittings.
3. Thread fitting into port until fitting washer (item 2, figure B) contacts the face of the port as shown in figure C. Tighten hand tight. **Do not use a wrench.**
4. Re-position fitting to desired orientation by turning it counter-clockwise to a **maximum** of 1 full turn.
5. While holding the fitting body securely with a wrench, torque the lock nut to **18–30 ft-lbs.**
6. Install the hose and, while holding the fitting body securely with a wrench, torque the hose end nut to **15 ft-lbs.**
7. Purge system per applicable instruction manual.

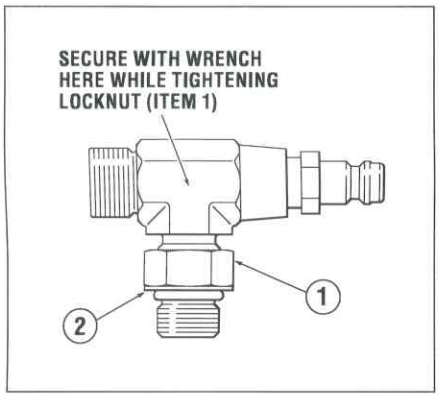

Figure B.

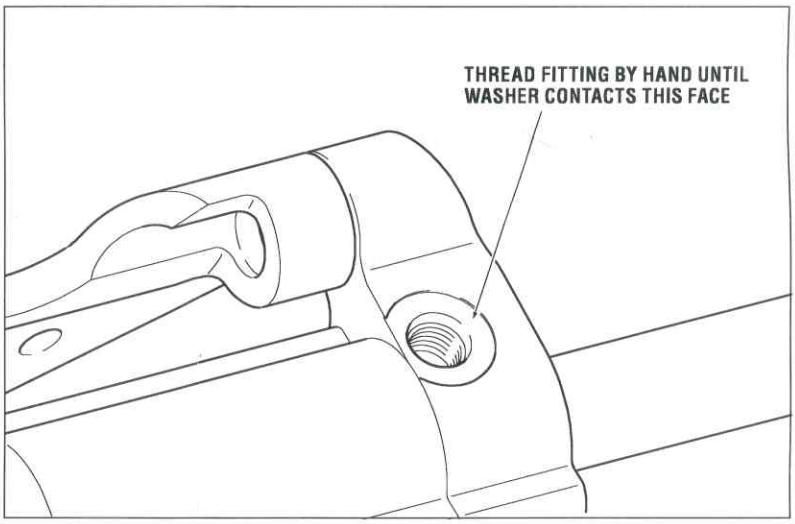

Figure C.

⚠ WARNING

SeaStar Solutions recommends that the hose and hose fittings are checked on a regular basis to ensure the safe operation of the steering system.

© 2018 Marine Canada Acquisition Inc. DBA SEASTAR SOLUTIONS 3831 No. 6 Road, Richmond, B.C. Canada V6V 1P6 Fax: 604.270.7172 Web: **www.seastarsolutions.com**