REVISION HISTORY			
REV	DATE	BY	DESCRIPTION
K	04SEP2019	DPZ/EHH	PRN: P2019-1949

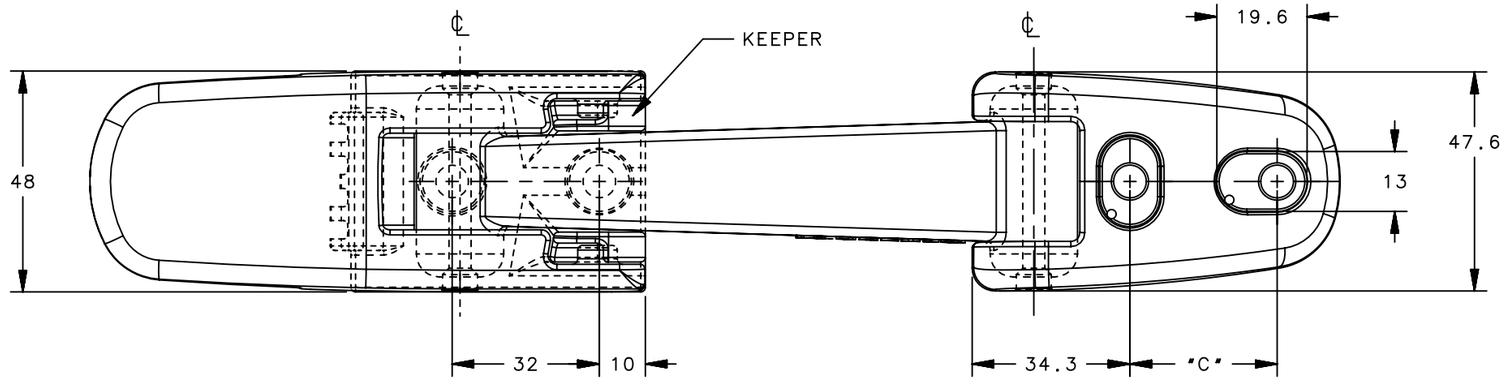

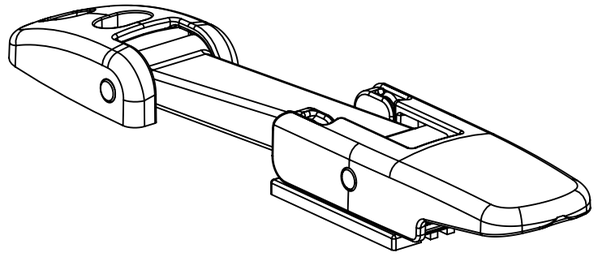

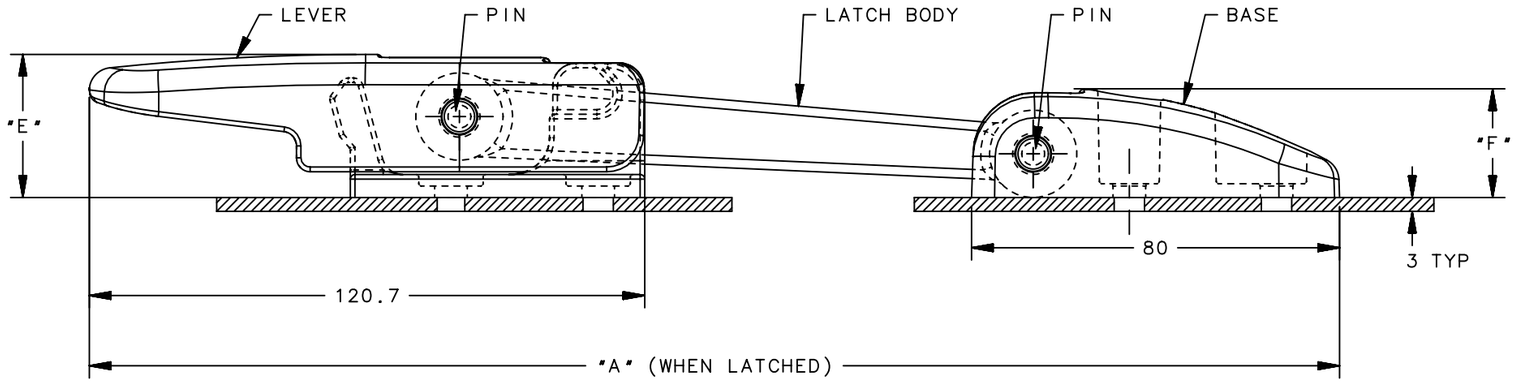

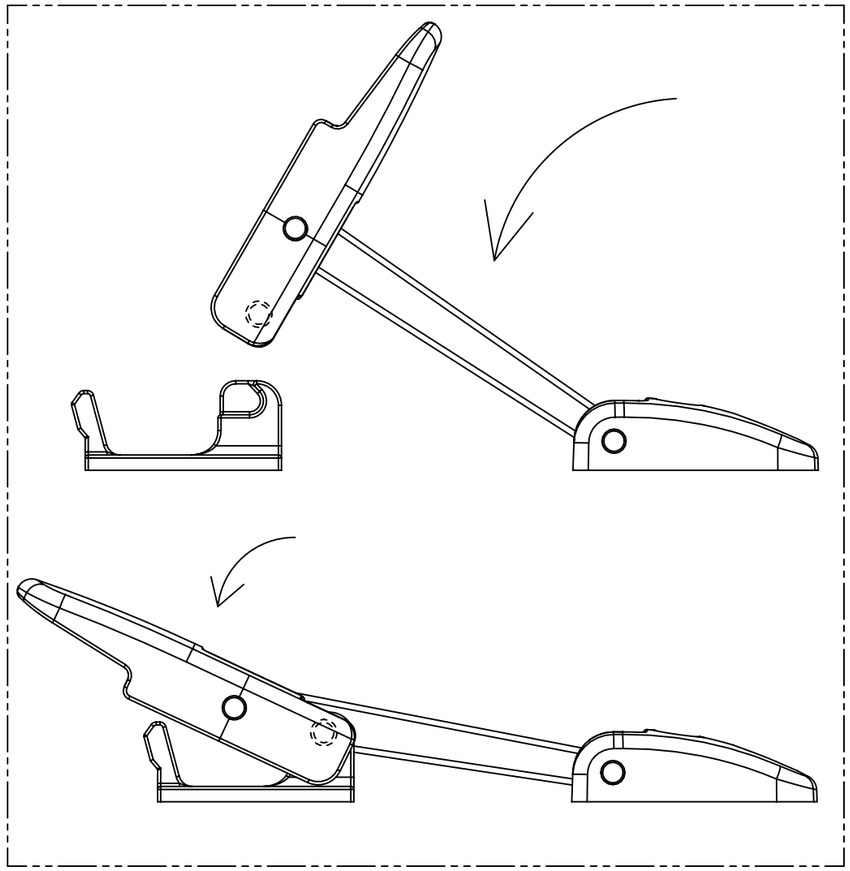

LATCH OPERATION

(4X) Ø"D" ±0.1
USE M5 OR M6 PAN OR
ROUND HEAD SCREWS
(NOT SUPPLIED)

PANEL PREPARATION

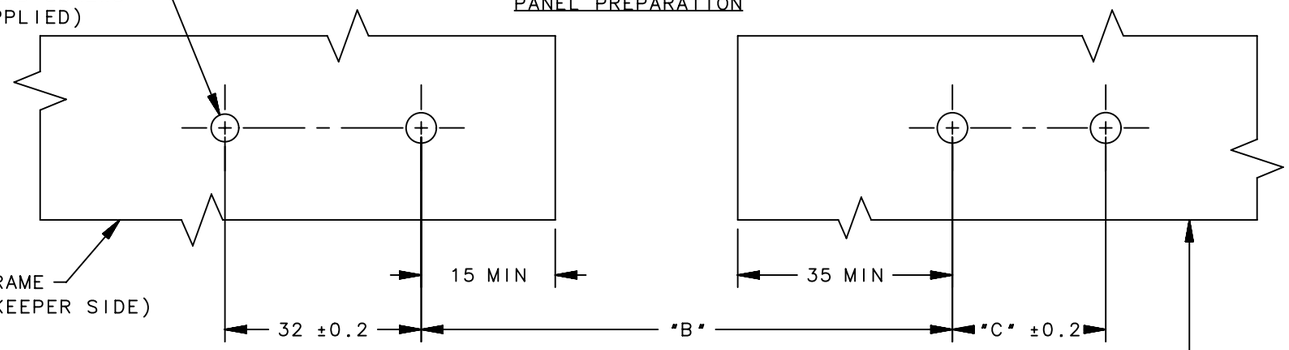

NOTES:

PART SHIPPED LAYER PACKAGED.
FOR INDIVIDUAL BAGGED ASSEMBLIES ADD -2 TO PART NUMBER. (EXAMPLE: 37-30-294-60-2)

MATERIAL AND FINISH:
LATCH BODY: EPDM RUBBER, BLACK
LEVER, KEEPER, AND BASE: GLASS-FILLED NYLON, BLACK
PIN: STAINLESS STEEL

PART NUMBER	A	B	C	D	E	F
37-40-305-60	300	144±4	32	6.6	39.1	29
37-40-295-60	300	144±4	32	6.6	31.1	23.5
37-30-297-60	379	222±6	25.4	5.5	31.1	23.5
37-30-294-60	254	97±3	25.4	5.5	31.1	23.5

SURFACE AREA

VOLUME

PROPRIETARY ITEM
EXCEPT FOR USES EXPRESSLY GRANTED IN WRITING, INFORMATION DISCLOSED HEREON IS CONFIDENTIAL AND ALL RIGHTS, PATENT AND OTHERWISE, ARE RESERVED BY SOUTHCO, INC.

THIRD ANGLE PROJECTION

MILLIMETERS [IN]

TOLERANCES UNLESS OTHERWISE NOTED

ALL DIMENSIONS WITHOUT TOLERANCES ARE FOR REFERENCE ONLY.

PER ASME Y14.5M-1994

southco®
CONNECT·CREATE·INNOVATE

DESCRIPTION
37 DRAW LATCH
FLEXIBLE • OVER CENTER • LEVER ASSIST

SIZE	SYSTEM	DWG NO.		
A3	NX	J-37-29		
DRAWN BY	DATE	SCALE	SHEET	
DLH/JSS	11OCT1996	1:1	1 OF 1	